BENQ MODEL NAME PD2706UA
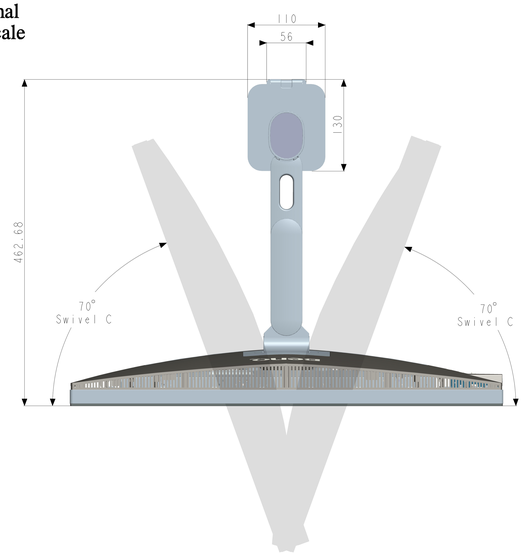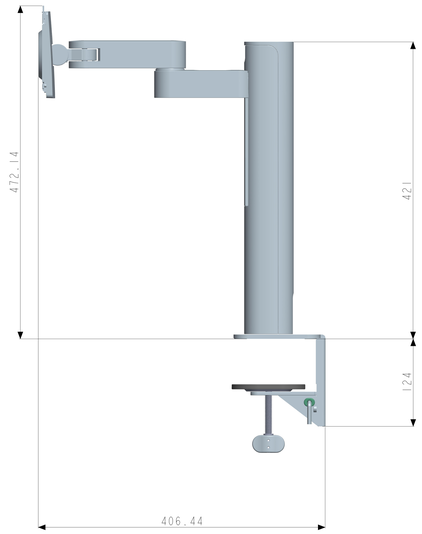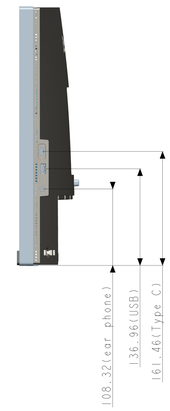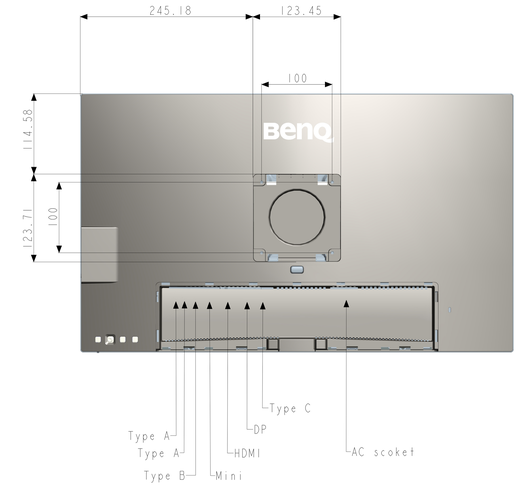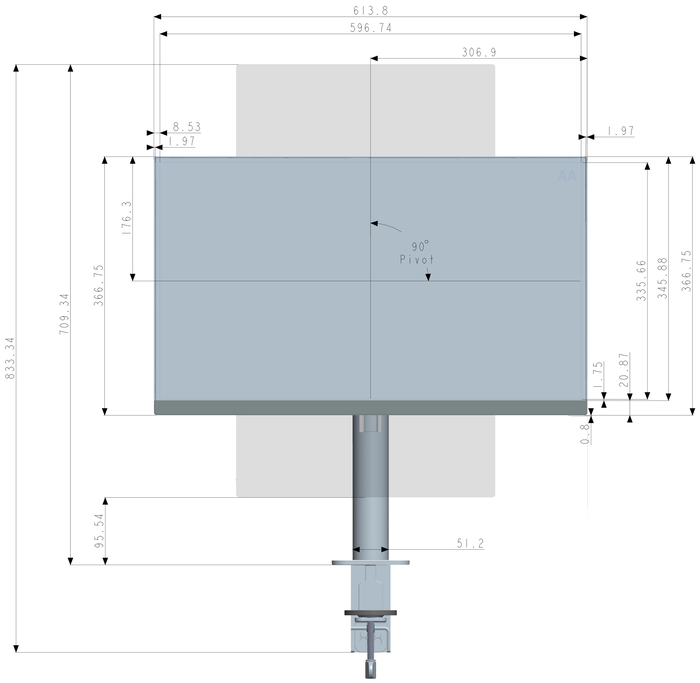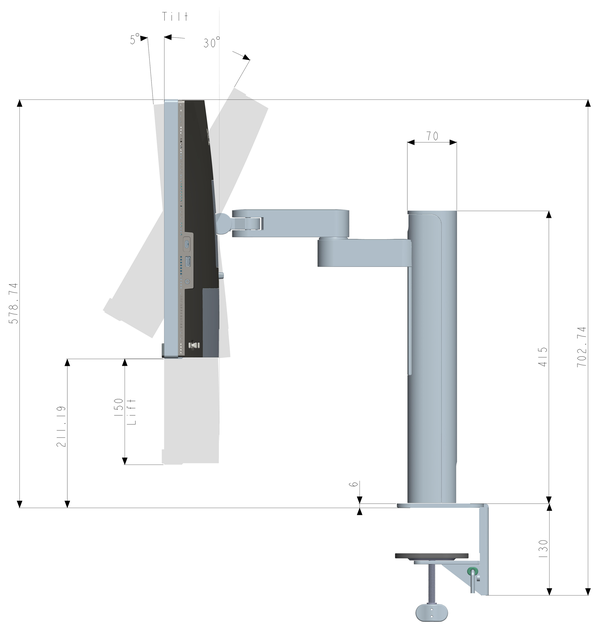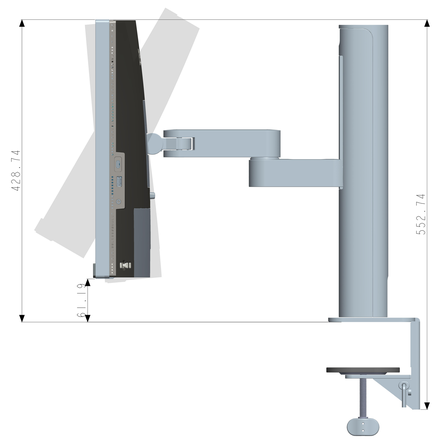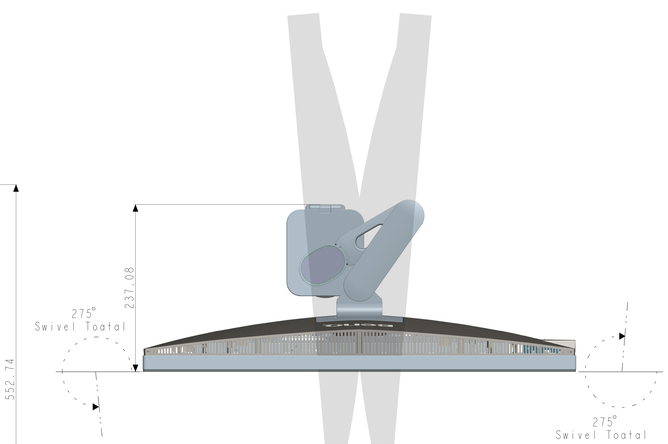
Unit : mm
Dimension : Norminal
Drawing : Not to Scale